GAR
EST. 1956
PRODUCTS

IRIS BASE ASSEMBLY

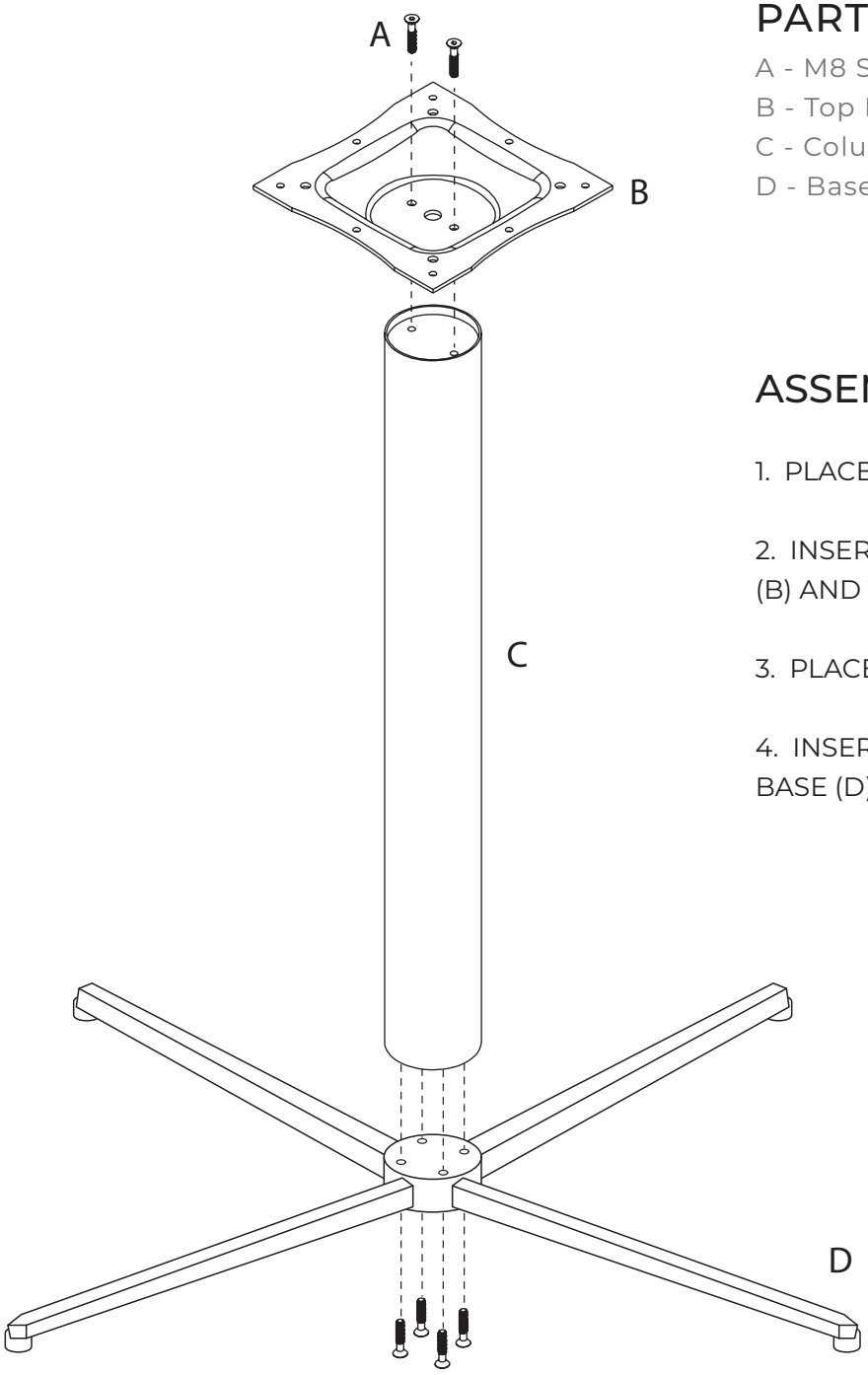

PARTS LIST

A - M8 Screw (6)
B - Top Plate (1)
C - Column (1)
D - Base (1)

TOOLS LIST

5mm Allen Key

ASSEMBLY STEPS

1. PLACE TOP PLATE (B) ON COLUMN (C)

2. INSERT M8 SCREW (A) THROUGH TOP PLATE (B) AND TIGHTEN

3. PLACE TUBE (C) ON THE BASE (D)

4. INSERT M8 SCREW (A) THROUGH THE STEEL BASE (D) AND TIGHTEN